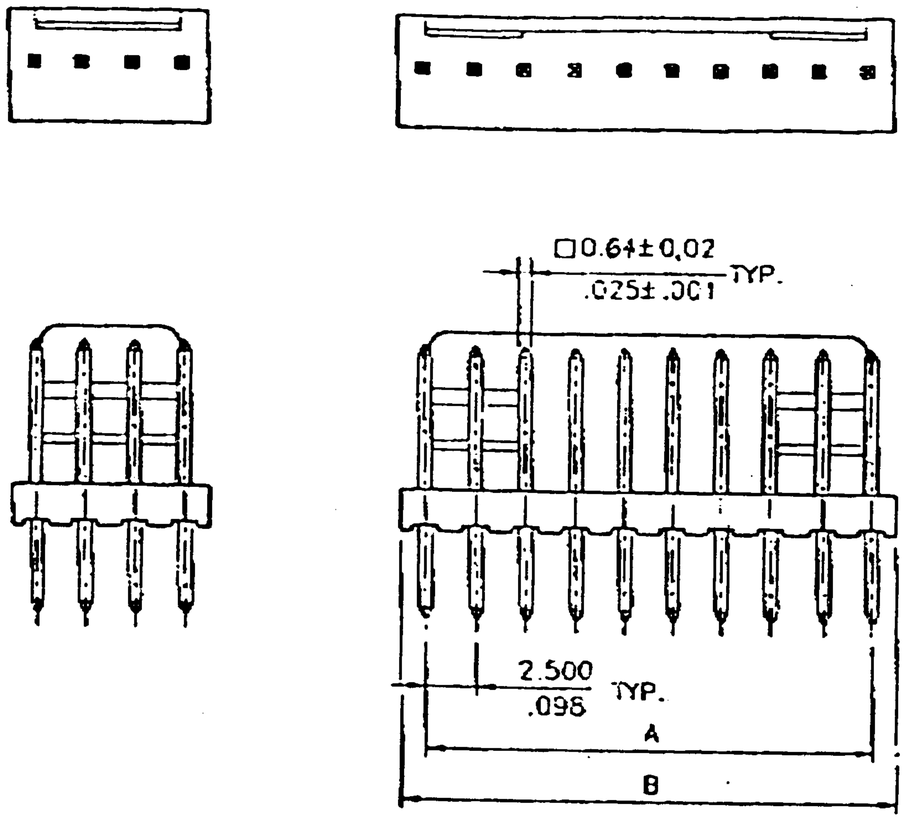

1 THROUGH 5 CIRCUITS

6 THROUGH 20 CIRCUITS

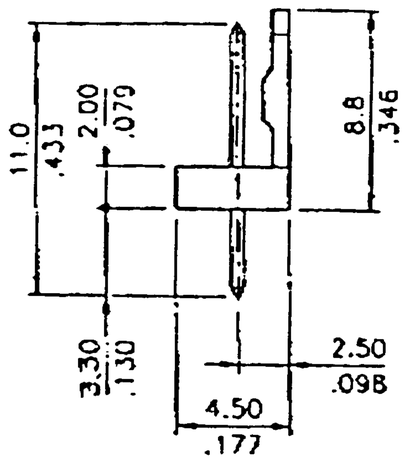

Poles	Dimension	
	A	B
2	2.5	5.1
3	5.0	7.6
4	7.5	10.1
5	10.0	12.6
6	12.5	15.1
7	15.0	17.6
8	17.5	20.1
9	20.0	22.6
10	22.5	25.1
11	25.0	27.6
12	27.5	30.1
13	30.0	32.6
14	32.5	35.1
15	35.0	37.6
16	37.5	40.1
17	40.0	42.6
18	42.5	45.1
19	45.0	47.6
20	47.5	50.1

SCALE 2:1 UNIT mm TOLERANCE ±0.25	MATERIAL: NYLON 66 UL 94V-2	DRAWING:2501-XX-ST STRAIGHT PIN HEADER 250DP 180

修正 REVISION	日期 DATE	説明 DESCRIPTION	承認 APPROVED BY	作図 DRAWW BY	設計 DESIGNED BY	比尺 SCALE		図番 DRAWING NO	頁番 SHEET NO	作番 JOB NO
				検図 CHECKED BY	承認 APPROVAL	日付 DATE				